Model No. M6501 6.5MM HIGH SPEED DRILL

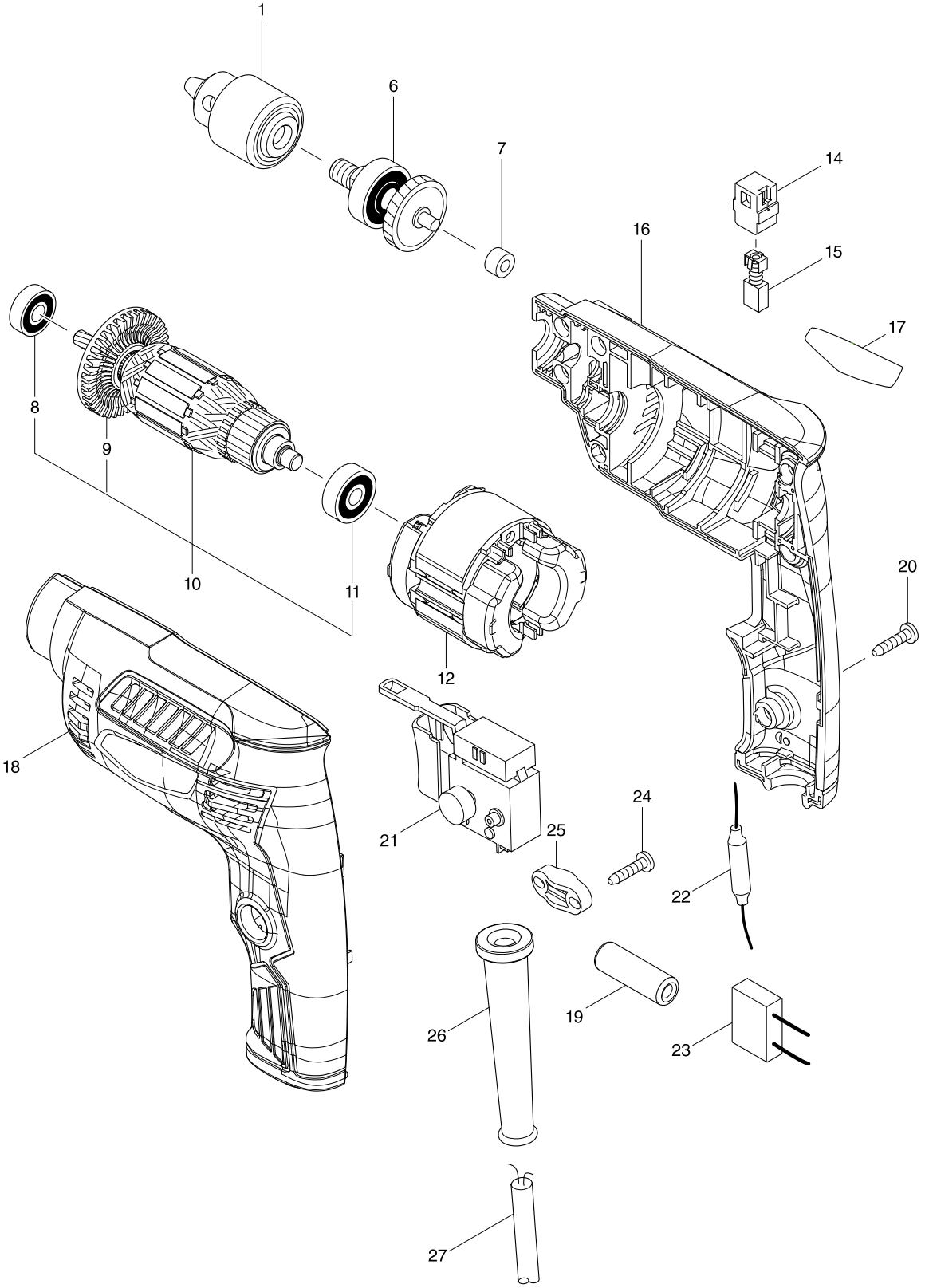

Model No. M6501 6.5MM HIGH SPEED DRILL

Item	Parts No.	Description	I/C	QTY	N/O	Opt. 1	Opt. 2	NOTE
001	766021-9	DRILL CHUCK 6.5		1				
006	141951-9	GEAR COMPLETE		1				
007	214043-8	PLANE BEARING 5		1				
008	210062-2	BALL BEARING 607ZZ		1	*			
008-1	211382-7	BALL BEARING 607ZZ	O	1				
009	240142-0	FAN 44		1				
010	515879-1	ARMATURE ASS'Y 240V		1				
D10		INC. 8,9,11						
011	210030-5	BALL BEARING 627ZZ		1	*			
011-1	210050-9	BALL BEARING 627ZZ	O	1				
012	633819-8	FIELD 240V		1				
014	643566-3	BRUSH HOLDER 5X8		2				
015	191998-3	CARBON BRUSH CB-85		1				
016A	183A99-7	HOUSING SET		1	*			
D10		INC. 18			*			
016-1A	183B97-7	HOUSING SET	<	1				
D10		INC. 18						
016-1B	183B01-6	HOUSING SET		1				
D10		INC. 18						
017	850V56-3	M6501 NAME PLATE		1				
018A	183A99-7	HOUSING SET		1	*			
D10		INC. 16			*			
018-1A	183B97-7	HOUSING SET	<	1				
D10		INC. 16						
018-1B	183B01-6	HOUSING SET		1				
D10		INC. 16						
020	266326-2	TAPPING SCREW 4X18		7				
021	650551-9	SWITCH FA1-3/2BEZ-4		1				
022	646172-3	CHOKE COIL		1				
023	645218-2	NOISE SUPPRESSOR		1				
024	266326-2	TAPPING SCREW 4X18		2				
025	687124-5	STRAIN RELIEF		1				
026	682569-2	CORD GUARD 8-85		1				
027	665383-1	POWER SUPPLY CORD 1.0-2-2.0		1	*			
027-1	695556-2	POWER SUPPLY CORD 1.0-2-2.0	O	1				
A01	418198-3	KEY HOLDER 9		1				
A02	763449-2	CHUCK KEY S6		1				
E01	688164-6	LINE FILTER		1				

Please order the parts with a part number.

Print Date 26/01/2017